ISSN 2395-1621

Flow analysis and noise reduction of discharge silencer by using cfd

#1M. A. Gavasane ,#2K. V. Mali

1maheshgavasane@gmail.com
2kvmali.scoe@sinhgad.edu

#1 Department of Mechanical Engineering, Sinhgad College of Engineering, Pune.
#2Department of Mechanical Engineering, Sinhgad College of Engineering, Pune.
Pune-41, India

ABSTRACT

Discharge silencers are used with rotary compressors to avoid flow fluctuations of gas. In this thesis an industrial problem of discharge silencer is discussed. A discharge silencer connected to a cooling gas compressor developed cracks at various locations on its body and supports. The vibration and noise levels of the system were very high. The plant operations were severely affected by the repetitive failures of the discharge silencer. Attempts to reduce the noise and vibration by introducing a diffuser, changing the position of the outlet duct etc did not bring about any significant change in the behavior of the discharge silencer.

To find out the root causes of the high level of vibration measured on the discharge silencer, it was decided to carry out a flow analysis. ICEM CFD with volume elements is used for meshing the various flow models and flow analysis is done using CFX as a solver. CFD Post is used for post-processing of the flow analysis results. Based on the results of flow analysis further design modifications are carried out. The modified structure is expected to exhibit much less noise and flow regulation.

Keywords— CFD**, CFX, compressors, cooling gas, Discharge silencer, ICEM CFD, noise, vibrations**.

ARTICLE INFO

Article History

Received :18th November 2015

Received in revised form :

19th November 2015

Accepted : 21st November , 2015

Published online :

22nd November 2015

I. INTRODUCTION

In many process plants discharge silencers are used in conjunction with rotary compressor to avoid flow fluctuations in the lines leading to process plant. This also aids controlling temperature and pressure in the plant. This discharge silencer is essentially for impedance matching of the downstream process flow to the upstream pulsating flow from the compressor. In the iron making plant using Corex process the melter gas mostly carbon mono-oxide is at high temperature. This gas needs to be cleaned, cooled before being compressed. This cooled, compressed gas is then mixed with high temperature melter gas before introduction into the reduction column for reduction of iron oxide. [1],

This discharge silencer is connected to the cooling gas rotary compressor. The compressor gas is consists of carbon mono-oxide with some impurities like water vapor, hydrogen, nitrogen, etc. and operational temperature is approximately 70°C. The compressor runs at a speed of 520rpm. The compressor discharge pressure is around 1.2 to 1.9 bar, which is the inlet pressure of the discharge silencer. The process layout is shown in Fig 1. [2], [3]

© 2015, IERJ All Rights Reserved

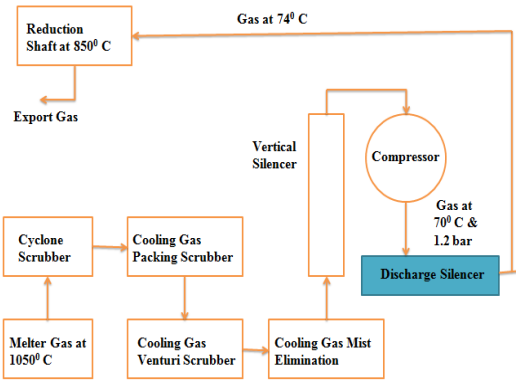

Fig 1: Location of Discharge Silencer in Corex Process

II. OBJECTIVES

The objectives of this paper are as follows

- To carry out the flow analysis of silencer and investigate the causes of high noise and thereby vibration on the discharge silencer.
- Improve the flow pattern level in discharge silencer

III. GEOMETRY

There are three initial cases available with difference in outlet location and inserted diffuser at inlet.

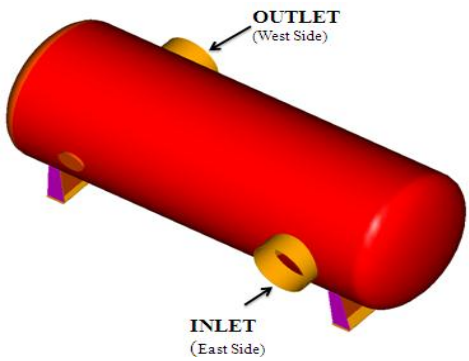

Fig2:Geometry Case 1

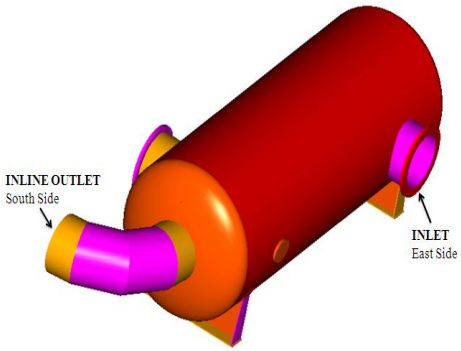

Fig 3: Geometry Case 2

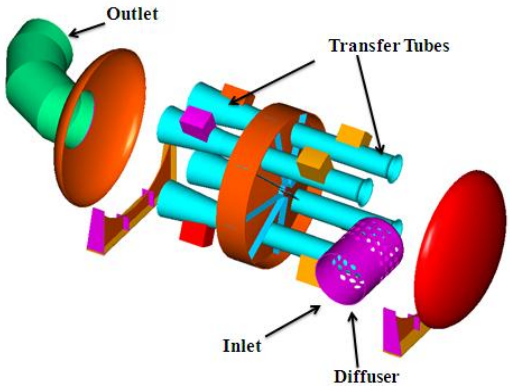

Fig 4: Geometry Case 3

As seen in Fig2 case 1 inlet and outlet both are radial. For second case outlet position is changed shown in Fig3.For case 3 is diffuser added at the inlet rest of the arrangement is as same as case 2. This is shown in Fig.4

IV. PRE-PROCESSING

Geometry is created and meshing is carried out using ICEM CFD. Tetra mesh is generated with prism layer in order to capture boundary layer. Given boundary conditions applied for simulation using CFX. Below tables gives information about mesh details and boundary conditions.[10]

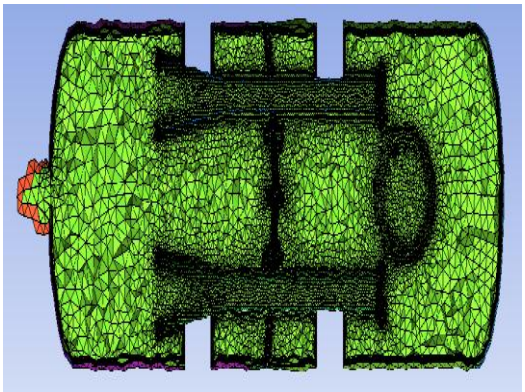

Fig 5: Mesh for simulation

TABLE 1: Mesh Details

Number of Nodes	1408770
Number of Elements	3620786
Tetrahedra	1348977
Wedges	2255155

© 2015, IERJ All Rights Reserved

V.RESULTS

Following figures shows results for Case3.

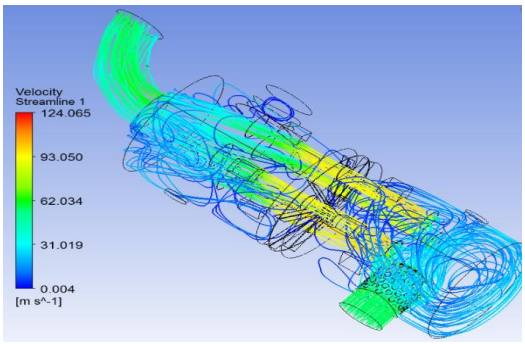

Fig 6: Velocity Streamlines

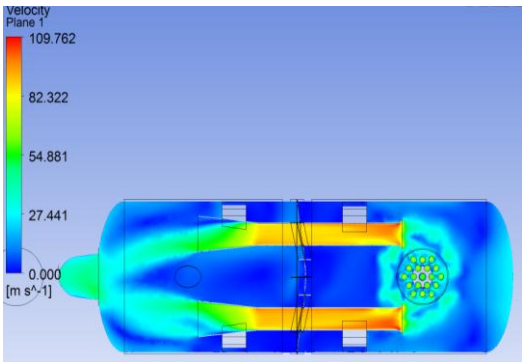

Fig 7: Velocity Contour on Plane for Front side TT

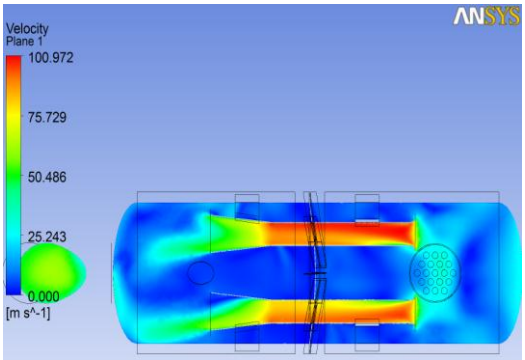

Fig 8:Velocity Contour on Plane for Rear side TT

VI.MODIFICATIONS

As per results obtained modifications were carried out. Transfer tube changed from 4 to 5 along with its diameter and shape. {4}, [5]

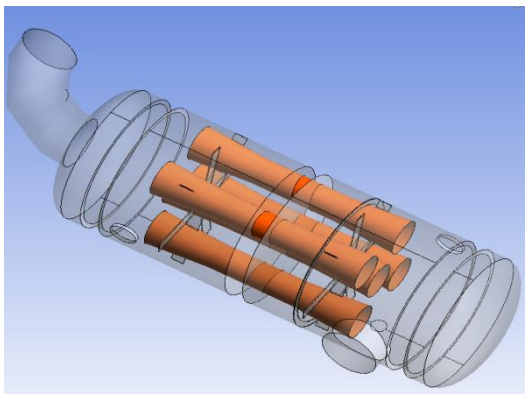

Fig 9: Modified geometry 1

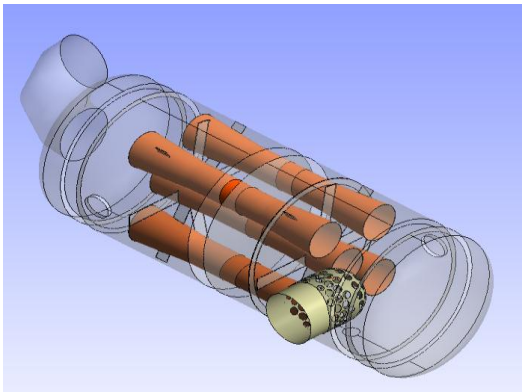

Fig 10: Modified geometry 2

Flow analysis is carried out for two cases without and with diffuser.

Number of Nodes	1611716
Number of Elements	4474746
Tetrahedra	2146717
Wedges	2328029

TABLE 3: Mesh Details

VII.RESULT OF MODIFIED GEOMETRY

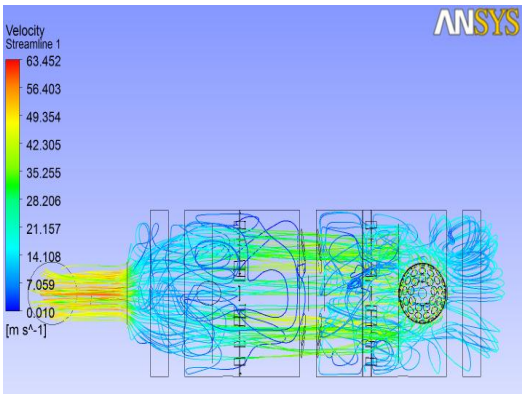

Fig 11: Velocity Streamlines

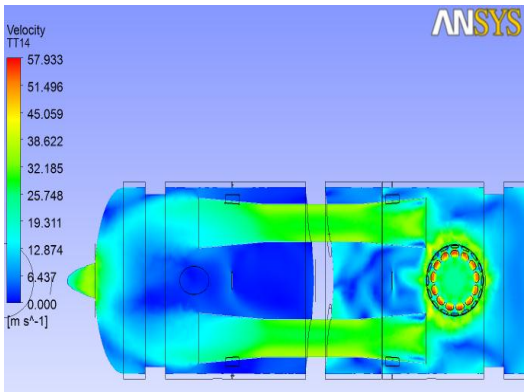

Fig 12: Velocity Contour on Plane for Front side TT

© 2015, IERJ All Rights Reserved

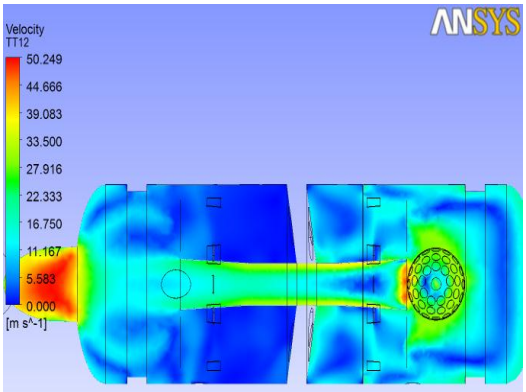

Fig 13: Velocity Contour on Plane for Central TT

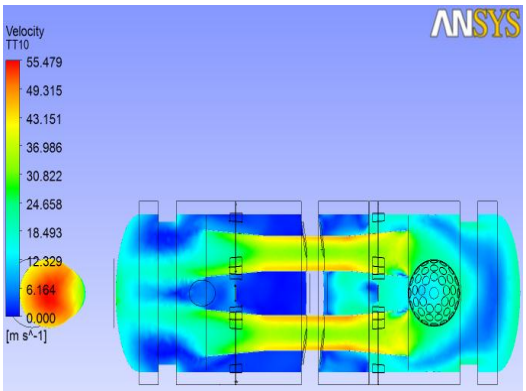

Fig 14:Velocity Contour on Plane for Rear side TT

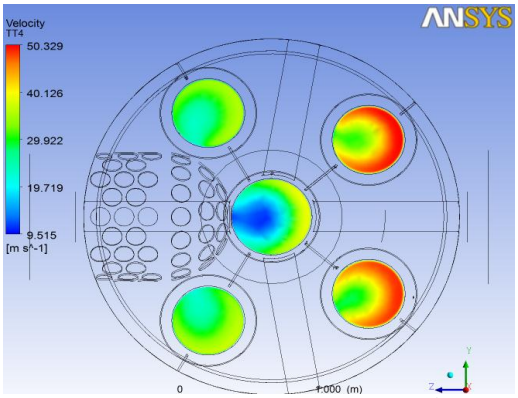

Fig 15:Velocity Contour on Plane at center of TT

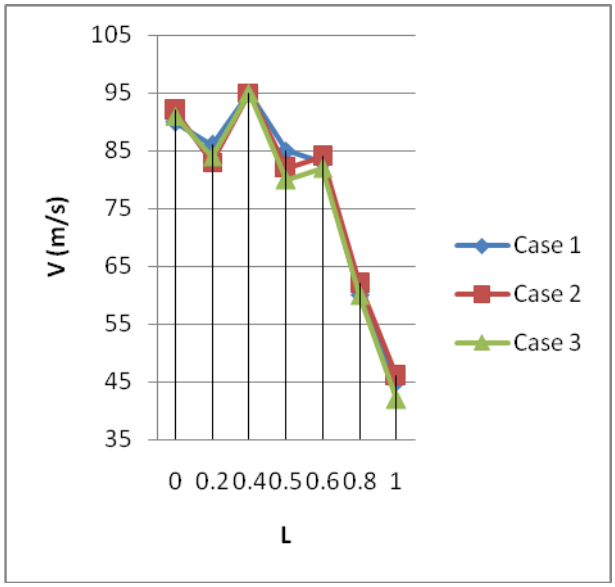

Fig 16:Velocity vs Flow length

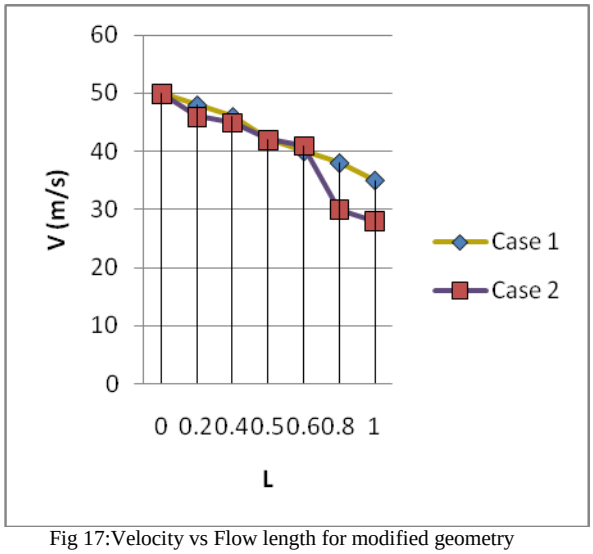

Fig 17:Velocity vs Flow length for modified geometry

VIII.DISCUSSION

As seen from velocity streamlines and velocity contour it clear that velocity of flow through TT is above 100 m/s which is shown in Fig 16. It is clear from Fig. 16 that there is sudden decrease in velocity along the TT. This is the main reason behind noise and excessive vibration leading to failure of component. With modified geometry, i.e. addition of one more transfer tube, velocity is reduced drastically to a value between 50-60 m/s which is shown in Fig 17. It shows linear drop in velocity. Also pressure drop through transfer tube reduced causing less energy input.

REFERENCES

[1] Atul Nalawade et. al. "Failure Investigation of Discharge Silencer in a Continuous Process Industry for High Reliability Design of a New Discharge Silencer", *Altair CAE Conference*, 2006.

[2] JeetSengupta et. al. "CFD Analysis of an Exhaust Silencer Stack ", *Gas Machinery Conference*, 2005.

[3] .Jianhua Fang et. al., "Study on pressure loss for a muffler based on CFD and experiment", *International Conference on Measuring Technology and Mechtronics Automation*, 2009, pp. 887-890.

© 2015, IERJ All Rights Reserved

[4] Zhou Jie et. al. "Design and experiment of silencer for discharging waste water of high temperature and pressure in nuclear power plant", IEEE, 2010.
[5] L. J. Erilksson and P. T. Thawani "Theory and practice in exhaust system design" *SAE*, 1985, pp 257-266.
[6] Shih TH, Liou WW, Shabbir A, Yang Z, Zhu J." A new k–ε eddy viscosity model for high Reynolds number turbulent flows—model development and validation", *Comput Fluids 24* (1995), 227–238.
[7] H. K. Versteeg, W. Malasekera, "An Introduction to Computational Fluid Dynamics, The Finite Volume Method", Longman Scientific and Technical, 1995.
[8] SuhasPatankar, "Numerical Heat Tarnsfer and Fluid Flow", Taylor and Francis.
[9] Ansys13 CFX, Solver Theory, Users Manual, Ansys ICEM CFD.
[10] Mavriplis DJ, "Unstructured mesh related issues in Computational Fluid Dynamics(CFD)-Based Analysis and Design", 11th International Meshing Roundtable, September 15-18, 2002, Ithaca, New York, USA.
[11] http://www.cfd-online.com/

© 2015, IERJ All Rights Reserved